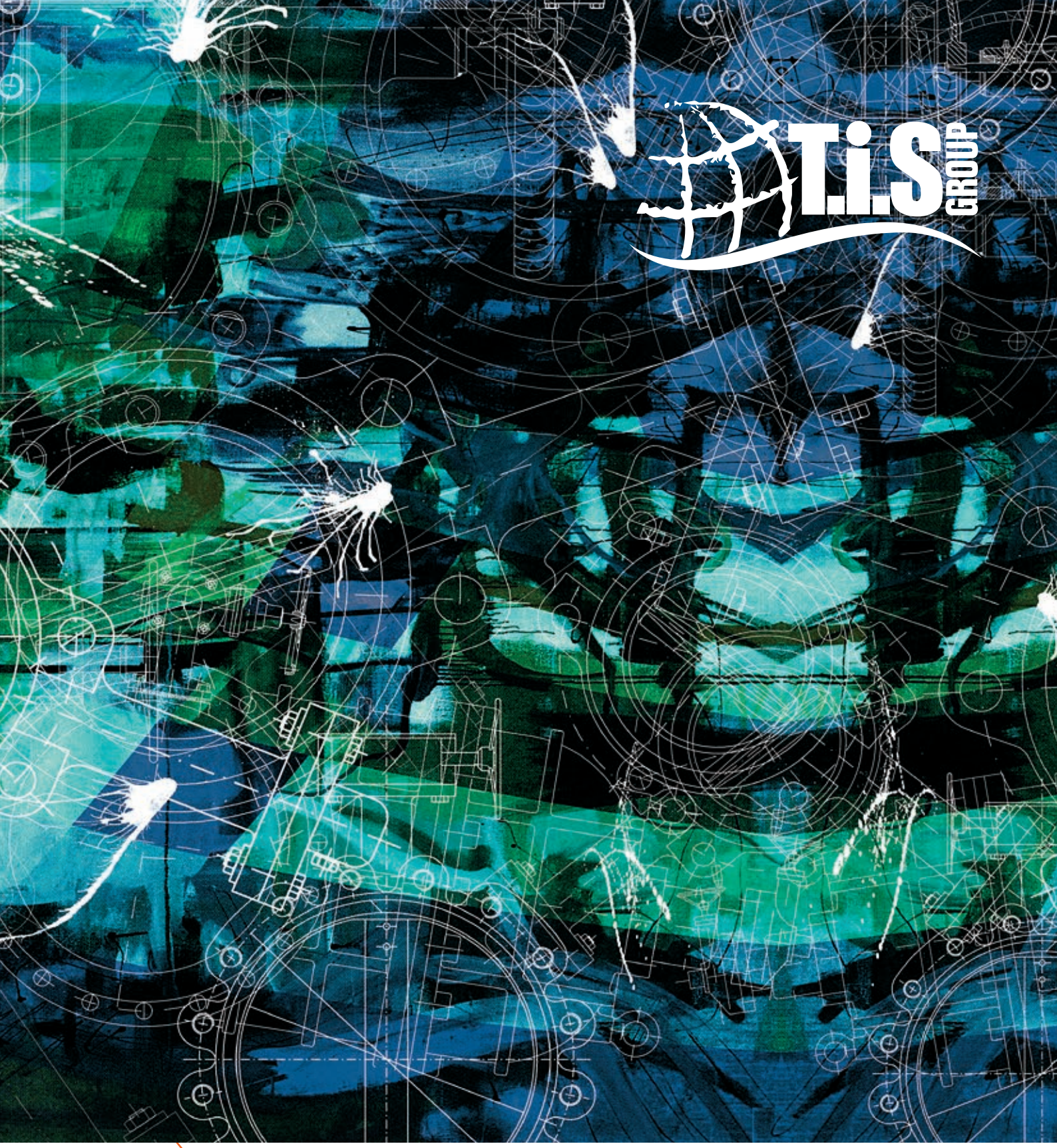

DOUBLE FLANGED DOUBLE ECCENTRIC BUTTERFLY VALVE

DOUBLE FLANGED DOUBLE ECCENTRIC BUTTERFLY VALVE

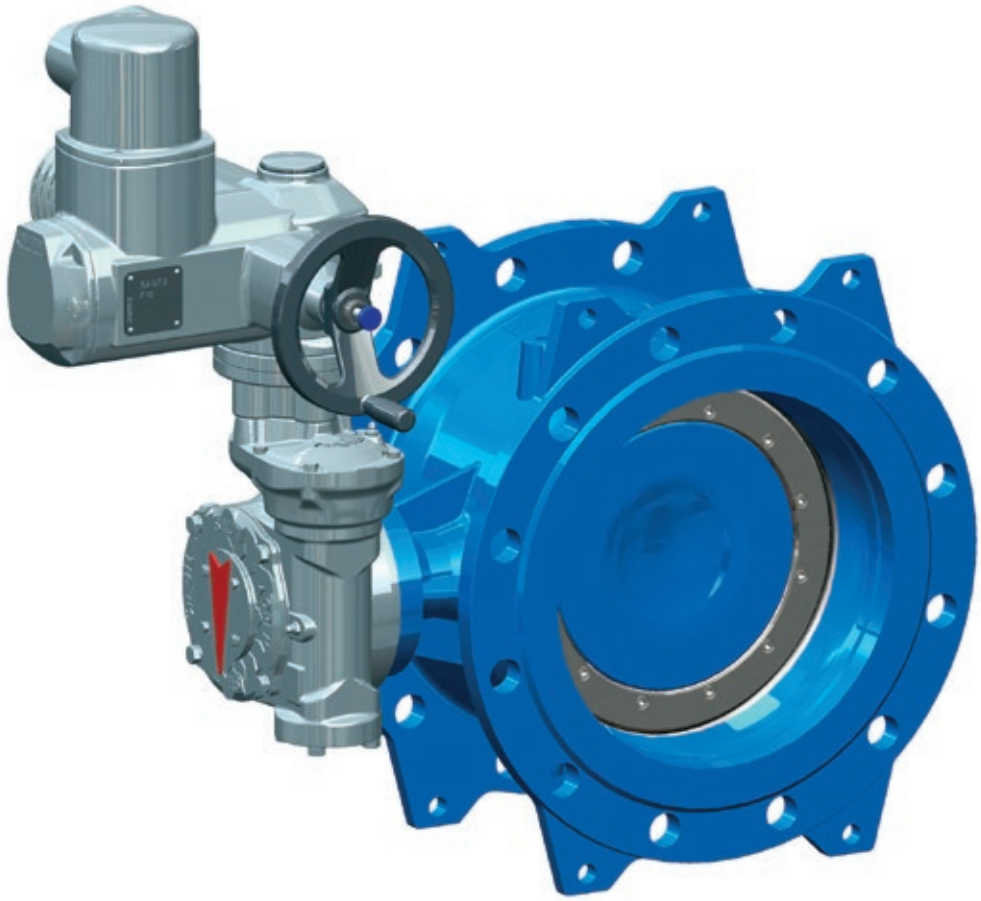

Double flanged double eccentric butterfly valve T.I.S. Type is designed to be installed in the pipeline in order to shut off the flow or limit it partially (indeed within certain limits double flange double eccentric butterfly valve could be also used as a control valve).
During closing operation, the disc is perpendicular to the flow direction, consequently, to open the valve the disc should be rotated by 90°.
The tightness of the valve is guaranteed by an automatic sealing system in the seat: in closed position the operating pressure supports the tight effect pressing the soft sealing ring against the conical seat surface in the valve body in both flow directions.
The double offset design of the valve allows to get two important advantages:

- when the valve is open, the profile sealing ring is completely unstressed;
- during opening/closing operations, the disc sealing ring does not apply any friction on the body seat: the operating torque is in this way reduced, and the sealing life is extended.

The valve is suitable for drinking water application: the fusion bonded epoxy process (FBE), with certified resin powders used for internal and external surfaces, guarantees a heavy corrosion protection.

DOUBLE FLANGED DOUBLE ECCENTRIC BUTTERFLY VALVE PN10 - PN16 - PN25 - PN40

DESIGN FEATURES

- Soft sealing according to EN 593;
- Face to face dimension according to EN 558 series 14;
- All materials, including lubricants, in contact with water approved for human consumption according to EN 1074-1 and EN 1074-2;
- One-piece body made of ductile iron EN GJS 400-15 according to EN 1563;
- Flange dimensions according to EN 1092-2;
- Screws, washers made of stainless steel A2-70 EN ISO3506-1;
- Retaining seal ring made of stainless steel EN 1.4301 EN 10088-3 (AISI 304);
- Body seat ring welded on the body, made of stainless steel;
- Shaft and disc polygon coupling “P3G” type according to DIN 32711;
- Main disc sealing ring made of EPDM according to EN 681-1 WA, WB;
- Shaft supported by solid and maintenance-free bronze bearings (PN25 - PN40, from DN600 and above, with additional PTFE low friction lining);
- Internal and external surface protection made of epoxy resin powder (FBE), blue colour RAL 5015 and thickness of 250µm;
- Hydraulic test according to EN 12266-1;
- Tight in both flow directions, rate A according to EN 12266-1 (zero drops);
- Working temperature Min. -10°C (excluded frost) Max. + 70°C;
- Gearbox with self-locking worm gear including mechanical position indicator;
- Gearbox suitable for coupling with actuator according to ISO 5210 top flange.

HIGH CORROSION-RESISTANT MATERIALS

Upon request, some parts can be produced with high corrosion-resistant materials such as:

- Retaining ring made of stainless steel 1.4571 EN 10088-3 (AISI 316Ti) or DUPLEX 1.4462 EN 10088-3;
- Shaft made of stainless steel 1.4301 EN 10088-3 (AISI 304), 1.4401 EN 10088-3 (AISI 316) or DUPLEX 1.4462 EN 10088-3;
- Screws and washers made of stainless steel A4-70 EN ISO 3506-1, DUPLEX or SUPERDUPLEX.

TIS Service reserves the right to make technical changes • ED. 01-2022

COMPONENT AND MATERIALS

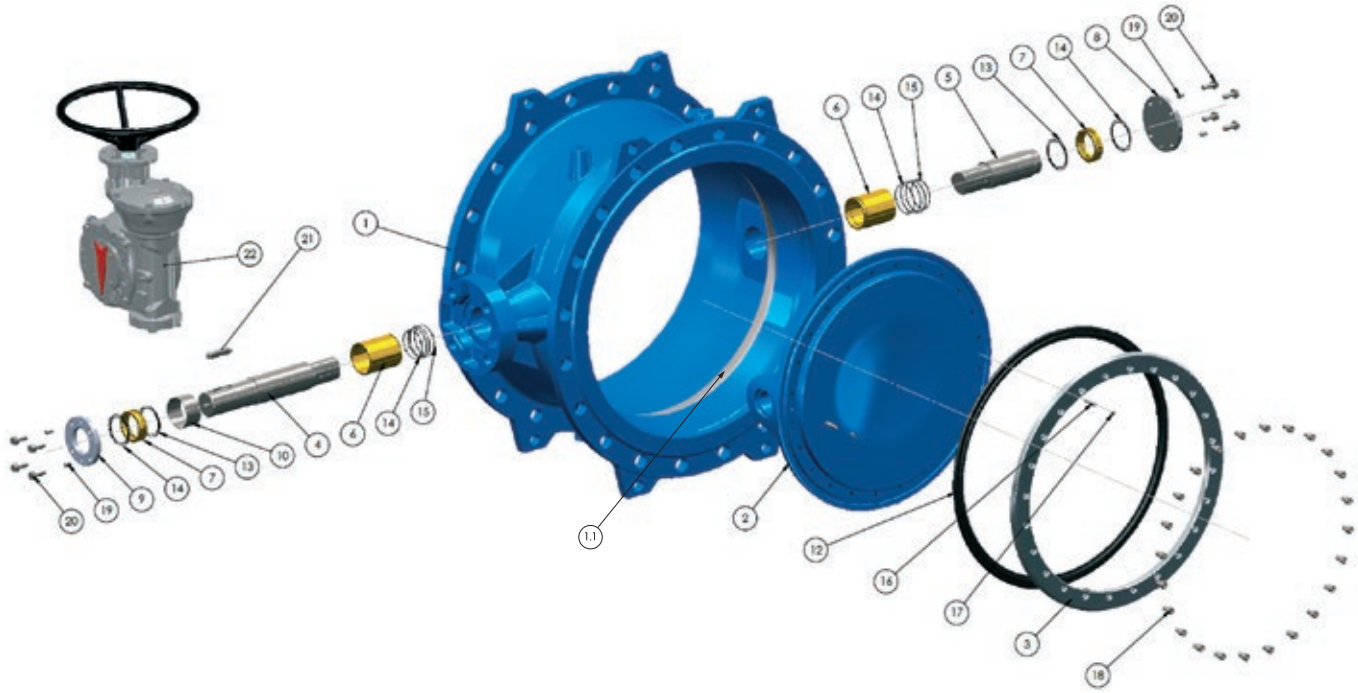

ITEM	COMPONENT	MATERIAL DESIGNATION	NOTE
1	Body	Ductile iron EN GJS 400-15	Epoxy coating 250 µm
1.1	Body seat ring	Stainless steel	Welded and microfinished
2	Disc	Ductile iron EN GJS 400-15	Epoxy coating 250 µm
3	Retaining seal ring	Stainless steel AISI 304 (EN 1.4301)	
4	Driven shaft	Stainless steel AISI 420 (EN 1.4021)	
5	Shaft (free end)	Stainless steel AISI 420 (EN 1.4021)	
6	Bearing bush	Aluminum bronze*	
7	Sealing bush	Aluminum bronze	
8	Cover	Stainless steel AISI 304 (EN 1.4301)	
9	Sealing bush flange	Stainless steel AISI 304 (EN 1.4301)	
10	Spacer	Stainless steel AISI 304 (EN 1.4301)	
12	Disc sealing ring	EPDM rubber	
13	O-ring	EPDM rubber	
14	O-ring	EPDM rubber	
15	O-ring	EPDM rubber	
16	Anti-blow out for shaft	Stainless steel	
17	Grub screw	Stainless steel A2-70	
18	Retaining ring screw	Stainless steel A2-70	
19	Grub screw	Stainless steel A2-70	
20	Screw and washer	Stainless steel A2-70	
21	Parallel key	Steel	
22	Gearbox	According to manufacturer specification	

* PN25-PN40, from DN600 and above, with additional PTFE low friction lining.

NUOVAL LINE

DIMENSIONS AND WEIGHTS (PN10 - PN16)

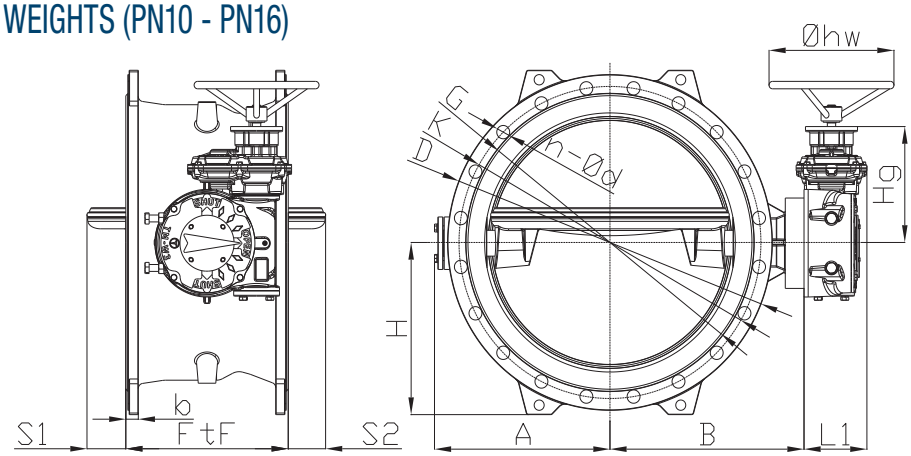

PN10														
DN	G	K	D	n-ød	b	FtF	A	B	L1	H	Hg	S1 - S2	øhw	W (kg)
150	211	240	285	8-23	19.0	210	160	172	91	147	133	-	200	29
200	266	295	340	8-23	20.0	230	185	218	91	180	133	-	200	51
250	319	350	395	12-23	22.0	250	209	242	91	210	133	-	250	63
300	370	400	445	12-23	24.5	270	240	268	115	235	186	15	200	82
350	429	460	505	16-23	24.5	290	263	291	115	262	186	30	200	112
400	480	515	565	16-28	24.5	310	298	336	123	288	210	40	200	146
450	530	565	615	20-28	25.5	330	325	363	149	312	251	55	200	185
500	582	620	670	20-28	26.5	350	348	386	149	342	251	70	200	216
600	682	725	780	20-31	30.0	390	422	466	149	400	264	95	300	333
700	794	840	895	24-31	32.5	430	482	530	200	460	315	130	300	515
800	901	950	1015	24-34	35.0	470	541	617	215	520	348	160	400	696
900	1001	1050	1115	28-34	37.5	510	614	673	215	568	348	190	500	942
1000	1112	1160	1230	28-37	40.0	550	675	721	215	625	348	215	630	1151
1100	1218	1270	1340	32-37	42.5	590	742	784	268	695	412	250	500	1565
1200	1328	1380	1455	32-41	45.0	630	798	868	268	738	412	275	500	1913
1400	1530	1590	1675	36-44	46.0	710	985	965	280	853	465	-	630	3004
1600	1750	1820	1915	40-50	49.0	790	1115	1110	346	973	577	-	630	4881
1800	1950	2020	2115	44-50	52.0	870	1245	1200	346	1073	577	-	630	5750
2000	2150	2230	2325	48-50	55.0	950	1495	1487	357	1183	624	-	630	7940

PN16														
DN	G	K	D	n-ød	b	FtF	A	B	L1	H	Hg	S1 - S2	øhw	W (kg)
150	211	240	285	8-23	19.0	210	160	172	91	147	133	-	200	29
200	266	295	340	12-23	20.0	230	185	218	91	180	133	-	200	51
250	319	355	405	12-28	22.0	250	209	242	91	210	133	-	250	63
300	370	410	460	12-28	24.5	270	240	268	115	235	186	15	200	82
350	429	470	520	16-28	26.5	290	275	313	123	267	210	30	200	114
400	480	525	580	16-31	28.0	310	298	336	149	293	251	40	200	172
450	548	585	640	20-31	30.0	330	336	386	149	324	251	55	250	217
500	609	650	715	20-34	31.5	350	372	420	149	368	264	70	300	290
600	720	770	840	20-37	36.0	390	430	492	200	430	315	95	300	476
700	794	840	910	24-37	39.5	430	497	572	215	470	348	130	400	600
800	901	950	1025	24-41	43.0	470	581	626	215	525	348	160	630	795
900	1001	1050	1125	28-41	46.5	510	644	686	268	573	412	190	500	1140
1000	1112	1170	1255	28-44	50.0	550	701	770	268	636	412	215	500	1451
1100	1218	1270	1355	32-44	53.5	590	792	818	280	696	465	250	630	1888
1200	1328	1390	1485	32-50	57.0	630	849	886	280	750	465	275	630	2327
1400	1530	1590	1685	36-50	60.0	710	992	965	346	858	577	-	630	3335
1600	1750	1820	1930	40-57	65.0	790	1136	1110	346	980	577	-	630	5028
1800	1950	2020	2130	44-57	70.0	870	1246	1220	356	1080	624	-	630	6787
2000	2150	2230	2345	48-62	75.0	950	1520	1385	357	1188	624	-	630	8940

TIS Service reserves the right to make technical changes • ED. 01-2022

DIMENSIONS AND WEIGHTS (PN25 - PN40)

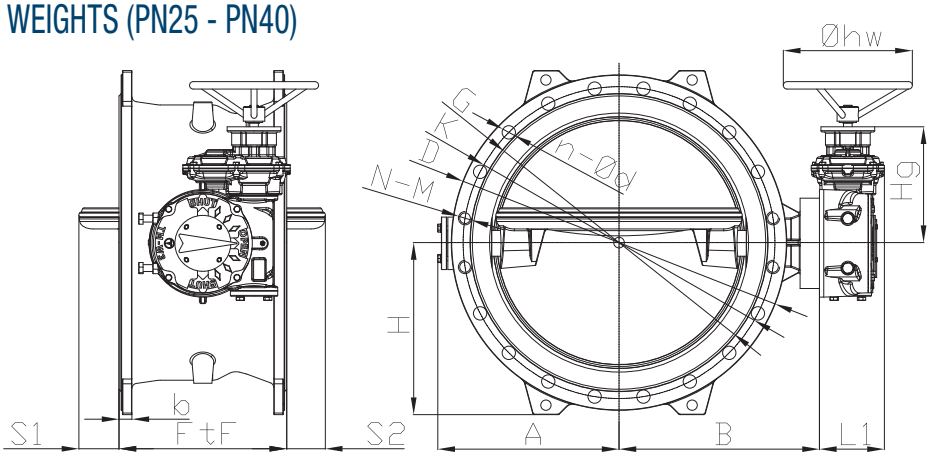

PN25															
DN	G	K	D	n-ød	N-M	b	FtF	A	B	L1	H	Hg	S1-S2	øhw	W (kg)
150	210	250	300	8-28	-	20.0	210	160	172	91	155	133	-	300	32
200	274	310	360	12-28	-	22.0	230	185	218	91	180	133	-	300	54
250	330	370	425	12-31	-	24.5	250	216	244	115	223	186	-	300	82
300	389	430	485	16-31	-	27.5	270	252	290	123	253	210	15	300	123
350	448	490	555	16-34	-	30.0	290	288	337	149	290	251	30	300	166
400	503	550	620	16-37	-	32.0	310	323	371	149	312	264	40	300	243
450	548	600	670	20-37	-	34.5	330	364	426	200	345	315	55	400	337
500	609	660	730	20-37	-	36.5	350	393	469	200	375	315	70	400	408
600	720	770	845	20-41	-	42.0	390	457	517	215	433	348	95	400	577
700	820	875	960	24-44	-	46.5	430	544	586	215	490	348	130	400	815
800	928	990	1085	24-50	-	51.0	470	606	676	268	560	412	160	400	1126
900	1028	1090	1185	28-50	-	55.5	510	676	704	280	610	465	190	630	1529
1000	1140	1210	1320	24-57	-	60.0	550	751	788	280	675	465	215	630	1992
1200	1350	1420	1530	32-57	-	69.0	630	869	901	338	775	536	275	630	3049
1400	1560	1640	1755	36-62	-	74.0	710	992	1040	357	858	624	-	630	4500

PN40															
DN	G	K	D	n-ød	N-M	b	FtF	A	B	L1	H	Hg	S1-S2	øhw	W (kg)
150	210	250	300	8-28	-	26.0	210	160	172	91	155	133	-	300	36
200	284	310	360	12-28	-	30.0	230	192	220	115	198	186	-	300	67
250	345	370	425	12-31	-	34.5	250	228	266	123	236	210	-	300	113
300	409	430	485	16-31	-	39.5	270	264	313	149	268	251	15	300	174
350	465	490	555	16-34	-	44.0	290	310	358	149	305	264	30	300	219
400	535	550	620	16-37	-	48.0	310	343	419	200	340	315	40	400	378
450	560	600	670	20-37	-	49.0	330	391	450	215	353	348	55	400	444
500	615	660	730	20-37	-	52.0	350	420	480	215	388	348	70	400	527
600	735	770	845	20-41	-	58.0	390	455	494	268	536	412	95	400	846
700	840	900	995	24-48	-	64.0	430	576	604	280	508	465	130	400	1249
800	960	1030	1140	24-57	4-M52	65.0	470	654	691	280	580	465	160	630	1606
900	1070	1140	1250	24-57	4-M52	76.0	510	720	761	337	635	536	195	630	1740
1000	1180	1250	1360	28-57	-	80.0	550	770	801	346	690	577	215	630	2170
1200	1380	1460	1575	28-62	4-M56	88.0	630	923	935	357	800	624	275	630	3325

PRESSURE DROP

Pressure drop of double flange double eccentric butterfly valves can be calculated using below equation:

$$\Delta P = (Q / K_v)^2 \text{ [bar]}$$

Where:

- ΔP = pressure drop [bar]
- Q = flow rate [m^3/h]
- Kv = flow coefficient [m^3/h] (see table below)

FLOW COEFFICIENT

DN	150	200	250	300	350	400	450	500	600	700	800	900	1000	1100	1200	1400	1600	1800	2000
Kvs [m^3/h]	996	2083	3832	5627	9415	11327	15328	19573	23081	37199	50747	61131	75808	94800	104074	182000	202700	286780	289081

Pressure drop of double flange double eccentric butterfly valves can be also evaluated by using below diagram:

PRESSURE DROP DIAGRAM

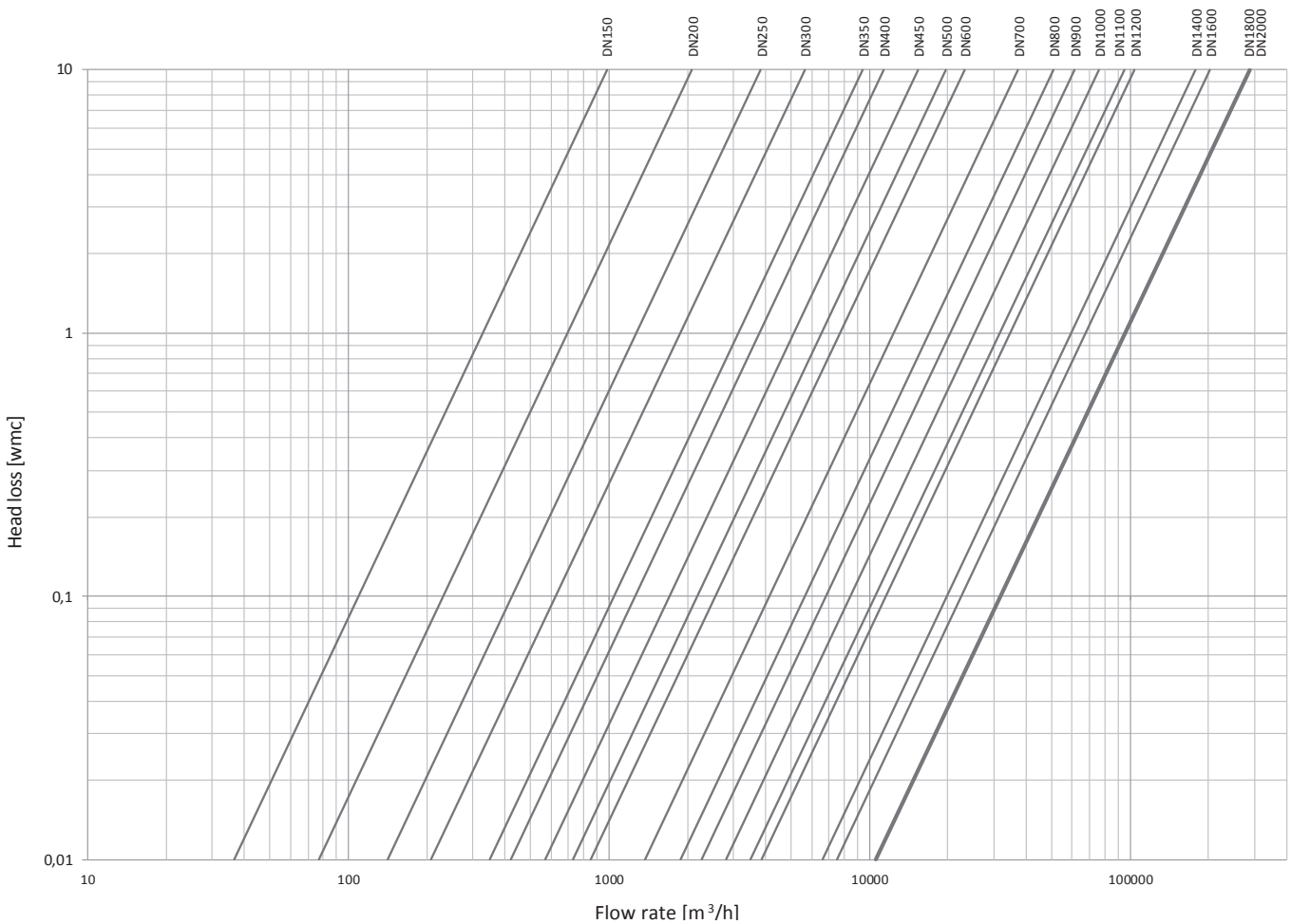

TIS Service reserves the right to make technical changes • ED. 01-2022

CAVITATION

Cavitation is a physical phenomenon which occurs when the pressure of a fluid, due to a sudden change in flow rate, drops below the evaporation pressure (at water 3.5kPa). It takes the form of small bubbles which implode instantly when they reach the area of higher pressure, causing tiny, extremely high-pressure jets. When these cavitation bubbles collapse, they are extremely noisy and cause shock waves, i.e. pressure waves which can be very intense, and they sound like rolling stones through pipeline. Measurements have shown that during the cavitation bubble burst, the pressure can rise up to 689 MPa and produce a sound of 100 decibels. If the bubbles implode near a solid wall, the micro-jet of fluid generated (known as an 'impinging jet') erodes the material of which the walls are formed and small craters (erosive pits) gradually develop. In practice, cavitation can occur when there are areas exposed to high head or sudden pressure losses. If it occurs continuously, it reduces the useful life of the components proportionally to its intensity, resulting in loss of efficiency first of all, and then going on to cause serious damage and breakage.
Cavitation is also a cause of friction and turbulence in the liquid, which leads to further reductions in efficiency.

CAVITATION LIMITS

The cavitation number is helpful when exploring flow dynamics problems in fluids in which cavitation can occur.
The cavitation number can be expressed as follows:

$$\sigma = \frac{P_2 + P_A - P_V}{(P_1 - P_2) + \frac{v^2}{2_g}}$$

Where:
P_1 = Inlet pressure (mca)
P_2 = outlet pressure (mca)
P_A = Atmospheric pressure (mca)
P_V = Evaporation pressure (mca)
v = Flow velocity (m/s)
g = Gravitational acceleration (m/s^2)

If the T.I.S. double flanged double eccentric butterfly valves are installed in the correct operating conditions, the calculated σ value should be above the K limit curve (the K limit curve is provided by T.I.S.).
Double flanged double eccentric butterfly valve are designed to intercept the flow. If a valve is used to control flow, the operating limits (maximum flow rate and cavitation) must be complied with. The recommended control range is between 20-70% of the degree of opening, above which reasonable control cannot be guaranteed since it practically no longer affects the flow through the valve. In the event of noise or vibrations during valve commissioning/operation, the actual operating conditions must be checked. If the operating conditions change, the equipment may need to be resized. If the calculated σ value is below the σK limit curves, cavitation may occur.
To address this problem, we recommend you:
- alter the back pressure;
- change the installation location.

If the σ value is above the σK limit curves, the noise may be caused by other factors and the pipeline must be checked.

LIMIT CURVE OF T.I.S. DOUBLE FLANGED DOUBLE ECCENTRIC BUTTERFLY VALVES

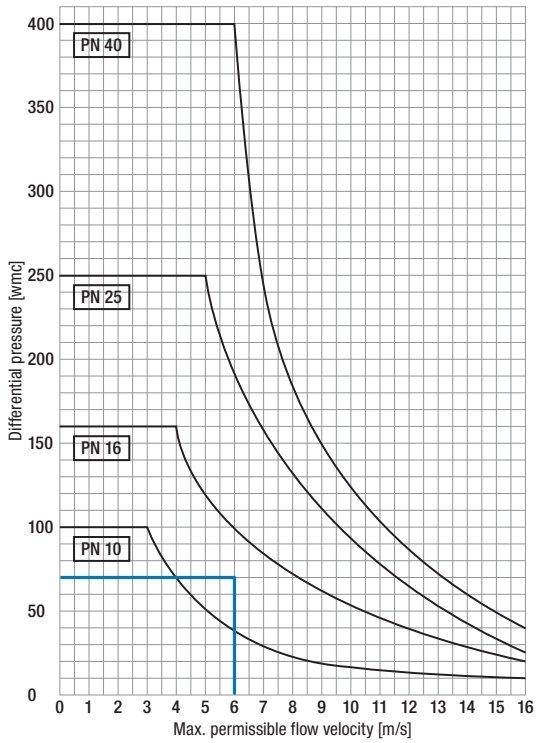

MAXIMUM PERMISSIBLE FLOW VELOCITY

When the fluid flows along the surface of the valve disk, the disk is exposed to flow forces determined by the flow velocity of the fluid in the pipeline. These forces act as torque on the axis of the disk.
According to standard UNI EN593, table 1, double flanged double eccentric butterfly valves are designed to withstand maximum flow velocity as stated below:

PN10: 3 m/s PN16: 4 m/s PN25: 5 m/s PN40: 6 m/s

The table on the right, which shows the maximum flow velocity allowed according to the differential pressure, allow the correct valve pressure value to be calculated based on the pipeline pressure (bar) and the flow velocity inside it (m/s). For example, with a differential pressure of 7 bar and a flow velocity of 6 m/s, the hydraulic moment of the flow around the disk is so high that a PN16 double flanged double eccentric butterfly valve.

NUOVAL LINE

DOUBLE FLANGED DOUBLE ECCENTRIC BUTTERFLY VALVE WITH VULCANIZED HARD RUBBER LINING

TIS double flanged double eccentric butterfly valve with vulcanized hard rubber lining for saline media (seawater or well-desalination) or corrosive media is designed to withstand the chemical attack of chloride ions.
Due to the fluid aggressivity, standard epoxy coated valve surfaces will be rapidly abraded or corroded. The best possible solution, in order to guarantee valves longevity and safe operation of the plants, is to protect the inner surface of the valve with 3 mm of hard rubber lining: in this way, the disc and the internal surface of the body are protected from the aggressive fluids.
Other parts of the valve in contact with water (shaft and retaining seal ring) are made of duplex stainless steel, with high resistance to corrosion.
Typical applications of double flanged double eccentric butterfly valves with vulcanized hard rubber lining are: water treatment plants, desalination plants, mines, industrial water and treatment plants in minerals.

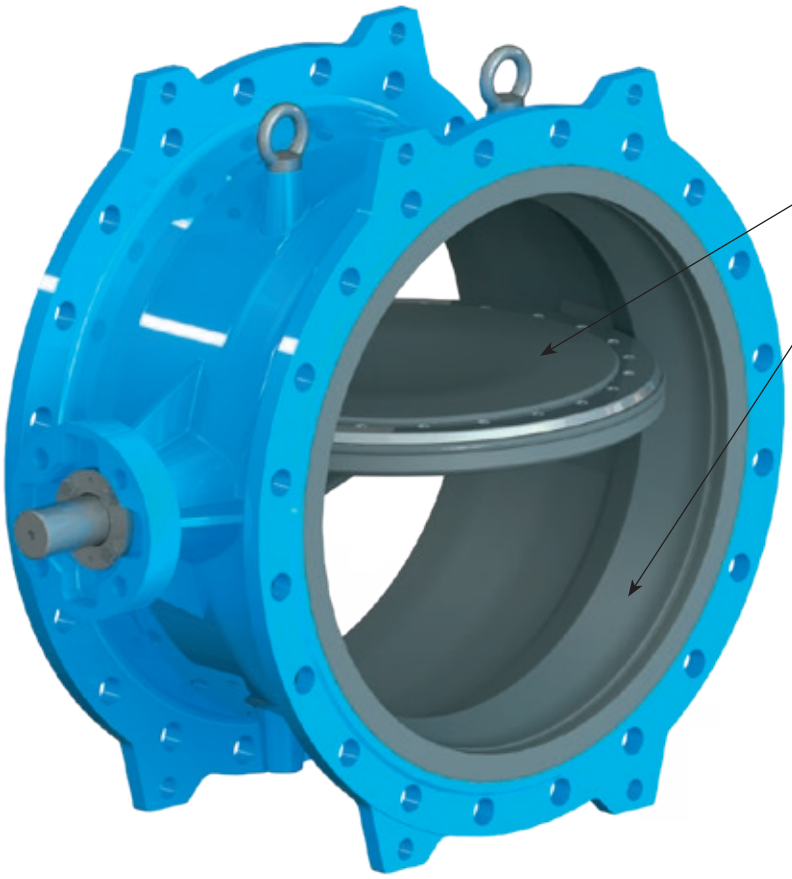

Body and disc surface, in contact with the fluid, is completely lined with a rubber layer which allows additional protection to the corrosion due to brackish waters and significantly increases lifespan of the valve.

TIS Service reserves the right to make technical changes • ED. 01-2022

COMPONENTS AND MATERIALS

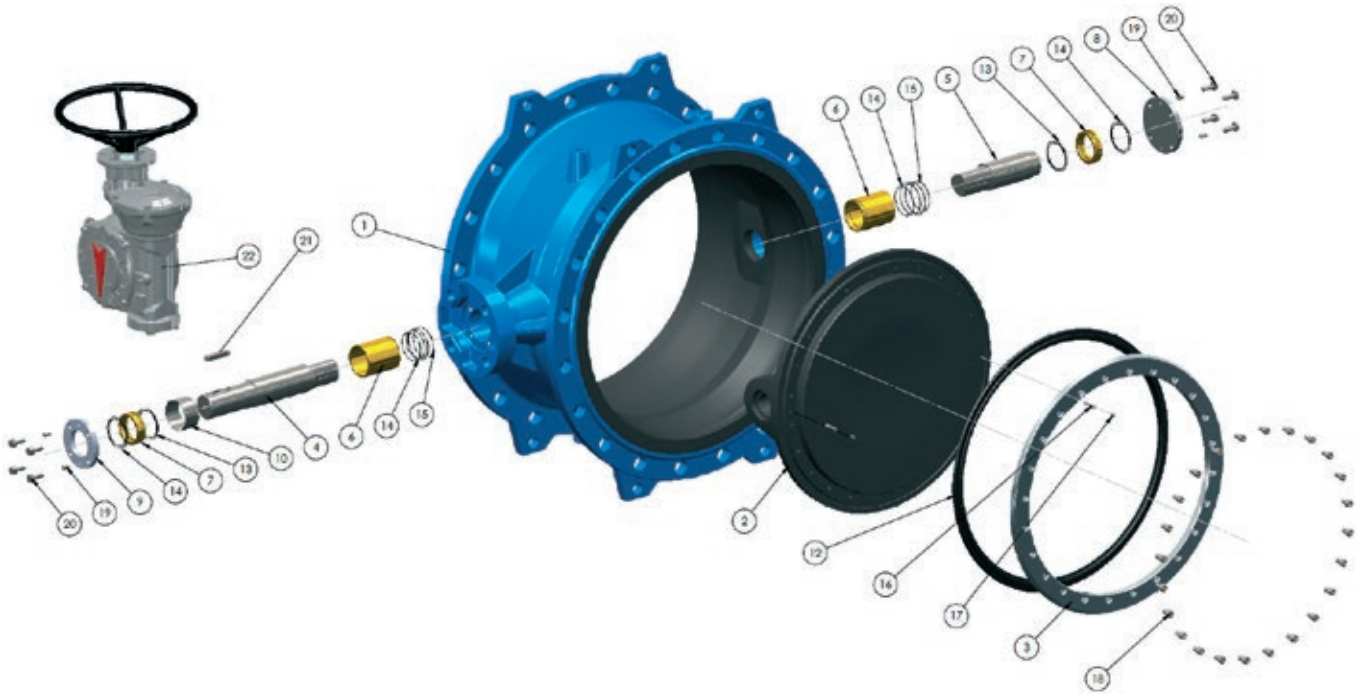

ITEM	COMPONENT	MATERIAL DESIGNATION	NOTE
1	Body	Ductile iron EN GJS 400-15	Internal coating made by vulcanized hard rubber, external coating epoxy powder 300 µm
2	Disc	Ductile iron EN GJS 400-15	Coating made by vulcanized hard rubber
3	Retaining seal ring	Stainless steel AISI 316Ti (EN 1.4571)	
4	Driven shaft	Stainless steel DUPLEX (EN 1.4462)	
5	Shaft (free end)	Stainless steel DUPLEX (EN 1.4462)	
6	Bearing bushing	Aluminum bronze*	
7	Sealing bushing	Aluminum bronze	
8	Cover	Stainless steel AISI 304 (EN 1.4301)	
9	Sealing bush flange	Stainless steel AISI 304 (EN 1.4301)	
10	Spacer	Stainless steel AISI 304 (EN 1.4301)	
12	Disc sealing ring	EPDM rubber	
13	O-ring	EPDM rubber	
14	O-ring	EPDM rubber	
15	O-ring	EPDM rubber	
16	Anti-blow out for shaft	Stainless steel	
17	Grub screw	Stainless steel A4-70	
18	Retaining ring screw	Stainless steel A4-70	
19	Grub screw	Stainless steel A4-70	
20	Screw and washer	Stainless steel A4-70	
21	Parallel key	Steel	
22	Gearbox	According to supplier specification	

* PN25 - PN40, from DN600 and above, with additional PTFE low friction lining.

NUOVAL LINE

DOUBLE FLANGED DOUBLE ECCENTRIC BUTTERFLY VALVE WITH HIGH CORROSION-RESISTANT MATERIALS

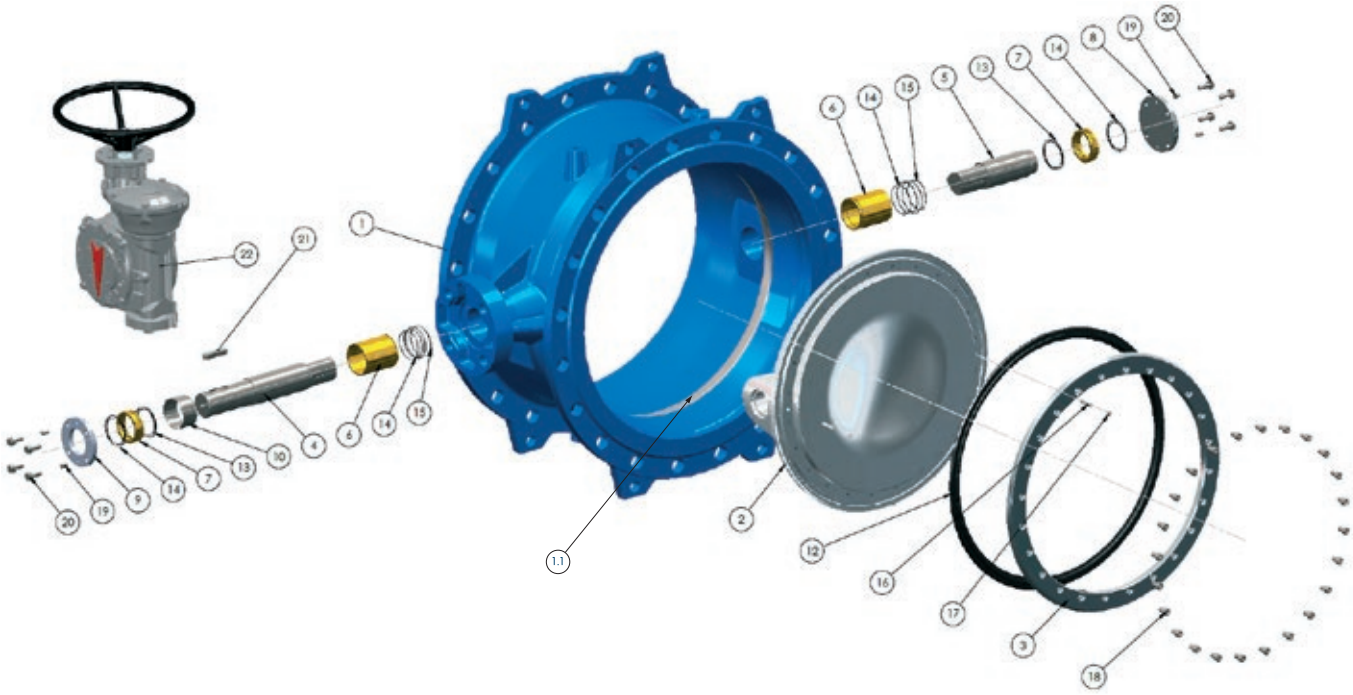

ITEM	COMPONENT	MATERIAL DESIGNATION	NOTE
1	Body	Ductile iron EN GJS 400-15	Epoxy coating 300 µm
1.1	Body seat ring	Stainless steel AISI 316L (EN 1.4404)	
2	Disc	Stainless steel AISI 316 (EN 1.4408)	
3	Retaining seal ring	Stainless steel AISI 316Ti (EN 1.4571)	
4	Driven shaft	Stainless steel DUPLEX (EN 1.4462)	
5	Shaft (free end)	Stainless steel DUPLEX (EN 1.4462)	
6	Bearing bush	Aluminum bronze*	
7	Sealing bush	Aluminum bronze	
8	Cover	Stainless steel AISI 316 (EN 1.4401)	
9	Sealing bush flange	Stainless steel AISI 316 (EN 1.4401)	
10	Spacer	Stainless steel AISI 316 (EN 1.4401)	
12	Disc sealing ring	EPDM rubber	
13	O-ring	EPDM rubber	
14	O-ring	EPDM rubber	
15	O-ring	EPDM rubber	
16	Anti-blow out for shaft	Stainless steel	
17	Grub screw	Stainless steel A4-70	
18	Retaining ring screw	Stainless steel A4-70	
19	Grub screw	Stainless steel A4-70	
20	Screw and washer	Stainless steel A4-70	
21	Parallel key	Steel	
22	Gearbox	According to supplier specification	

* PN25-PN40, from DN600 and above, with additional PTFE low friction lining.

TIS Service reserves the right to make technical changes • ED. 01-2022

OPERATING DEVICES

BURIED SERVICE

WORM GEARBOX
AND HANDWHEEL

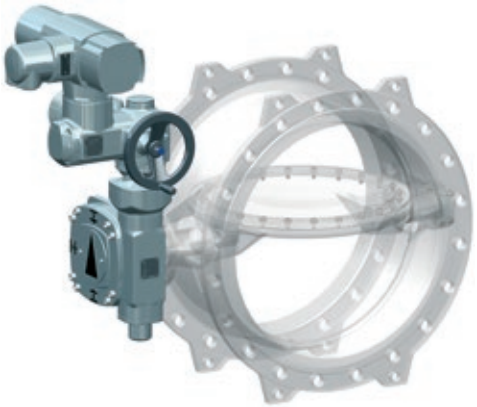

ELECTRIC ACTUATOR

BARESHAFT
VALVE

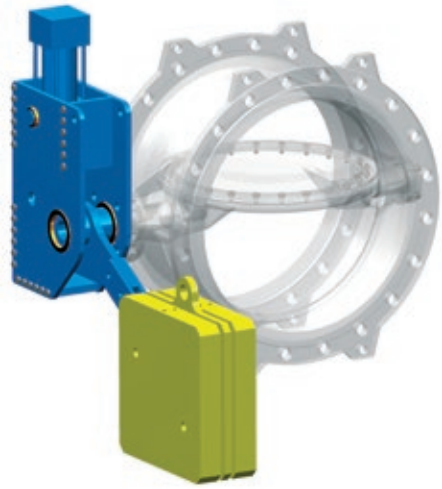

HYDRAULIC CYLINDER
AND COUNTERWEIGHT

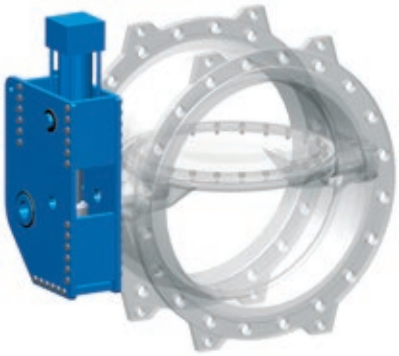

DOUBLE ACTING
HYDRAULIC CYLINDER

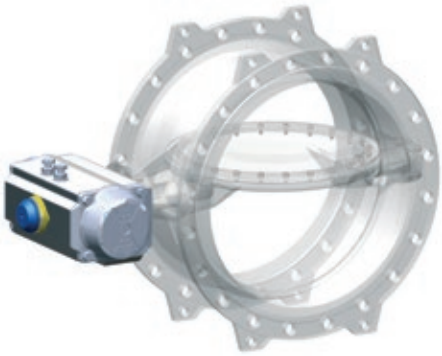

PNEUMATIC ACTUATOR

NUOVAL LINE

MAIN APPLICATION

HYDRO POWER PLANTS APPLICATION

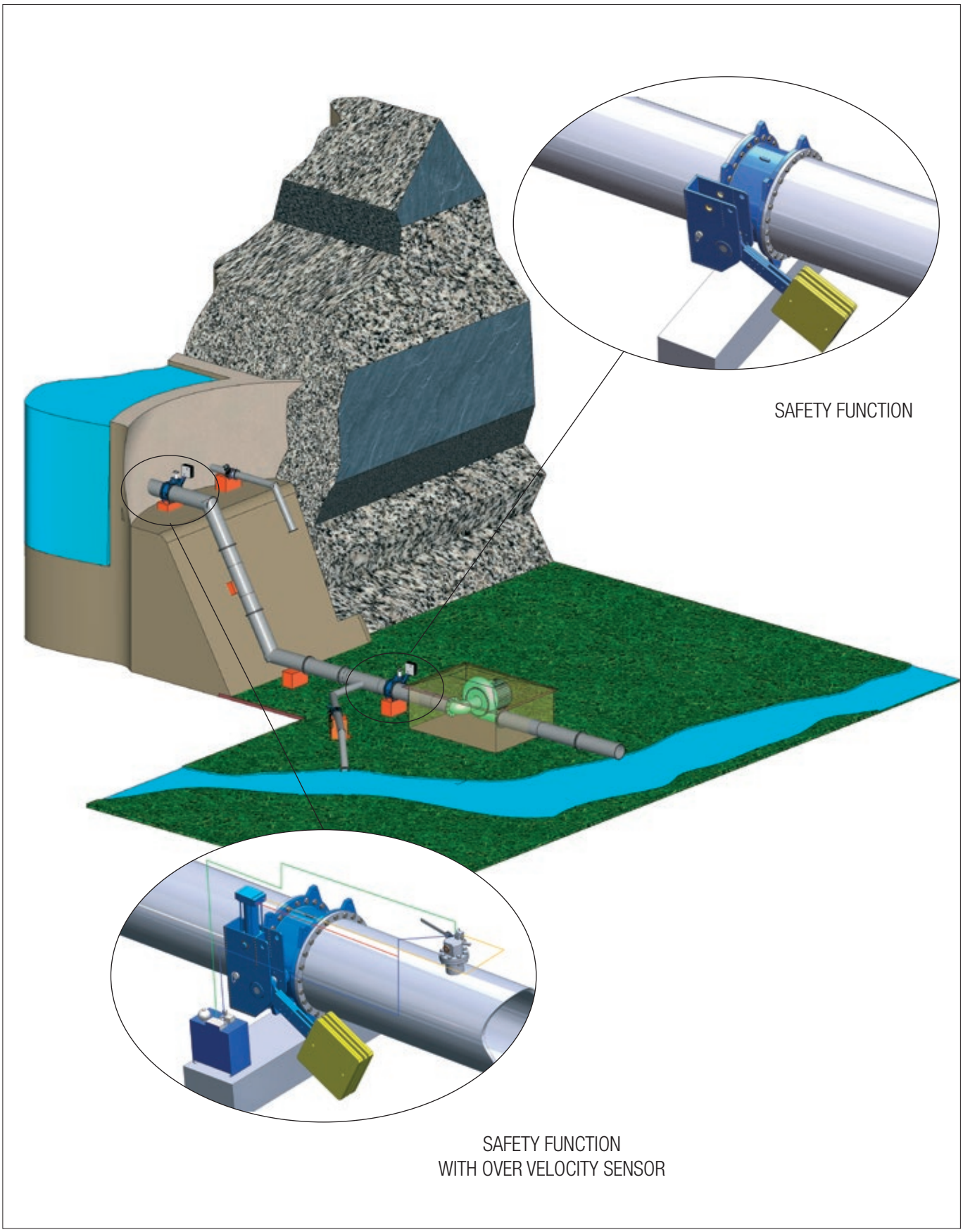

TIS Service reserves the right to make technical changes • ED. 01-2022

SAFETY FUNCTION

Safety hydraulic cylinder and counterweight butterfly valves are generally used in hydroelectric power plants (see figure below), water supply, irrigation. The main functions are:

- to protect turbines/generators;
- to prevent damage caused by pipeline failure;
- to shut off the supply line in case of power failure;
- as a check valve in case of pipe backflow.

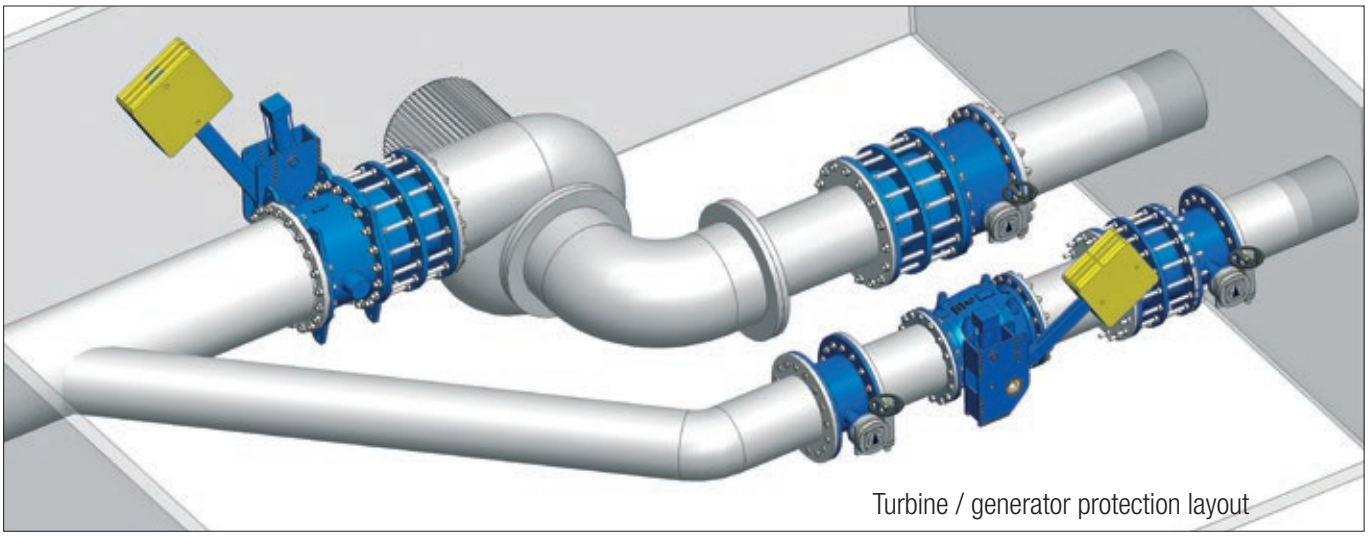

Turbine / generator protection layout

SAFETY FUNCTION WITH PADDLE FLOW DETECTION SYSTEM

The butterfly valve with hydraulic cylinder and counterweight is equipped with a mechanical device for fluid speed detection in case of applications as turbine (or generator) protection or to prevent possible leakage of fluid due to pipeline breakage.
The paddle system detects the fluid speed in the pipeline: if the pre-set limit speed exceeds, the paddle triggers the hydraulic cylinder, which will operate the valve (opening or closing the valve according to the safety function).

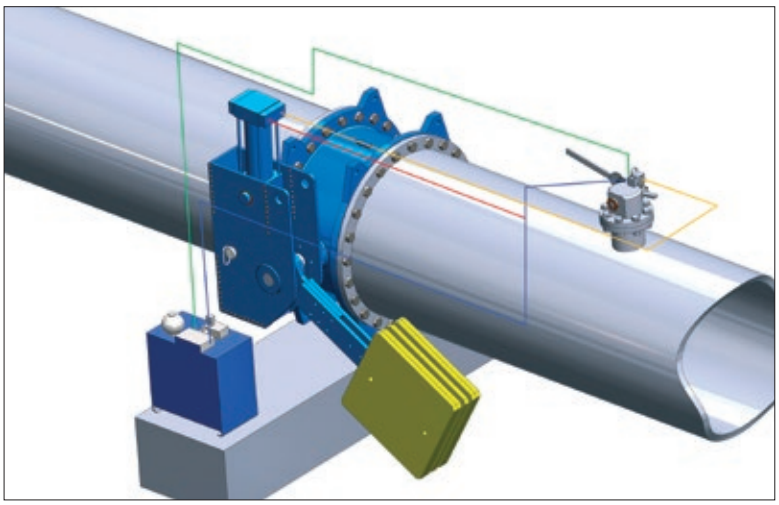

A typical application of hydraulic cylinder (provided with the hydraulic unit) and the counterweight butterfly valve with paddle flow detection system.

NUOVAL LINE

ON - OFF FUNCTION

Double flanged double eccentric butterfly valves are generally used in the pipelines to shut off fluids. The valves can be manually, electric, pneumatic or hydraulic actuated.

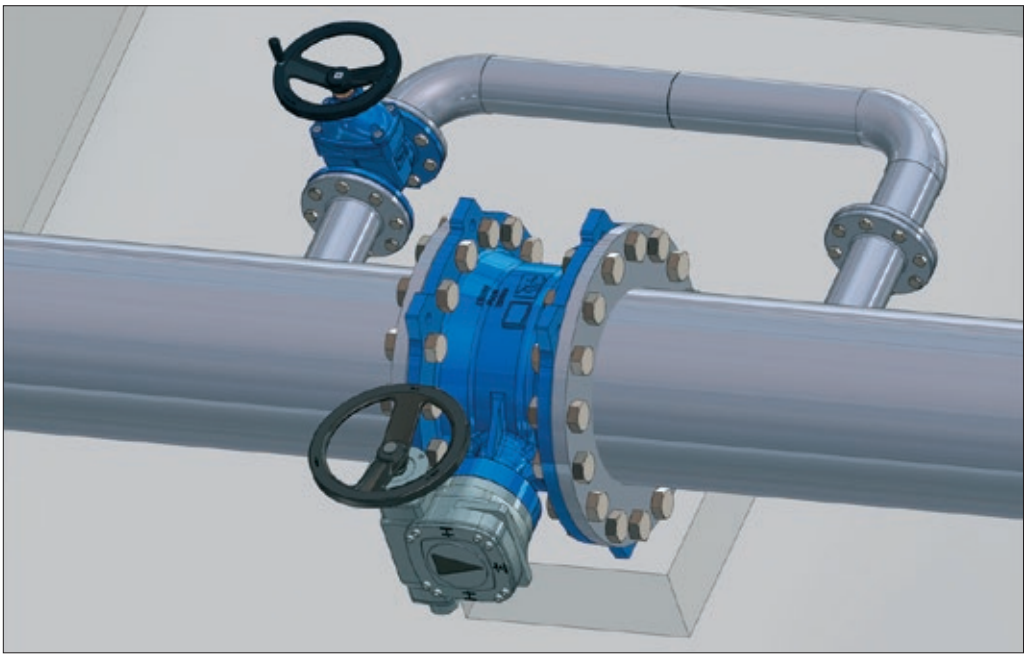

TIS Service reserves the right to make technical changes • ED. 01-2022